MIVEN Machine Tools

MIVEN MACHINE TOOLS LIMITED

An ISO 9001:2000 Certified Company

The Closer you look into a Warner & Swasey Turning Center
The further your expectations are exceeded

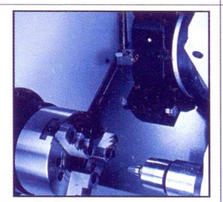

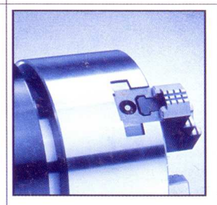

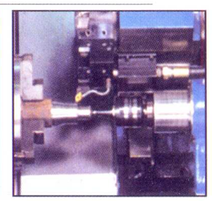

SLANT BED

GL160 / 200

CNC LATHES

VENUS SLANT BED

MIVEN Machine Tools

Specifications	Venus-250
Chuck Size	250 mm
Max. turning diameter (chucking/bet'n center)	280/250 mm
Swing over way covers	470 mm
Swing over Carriage	280 mm
Turning Length (ABC)	500 / 700
Spindle Nose	A2-6
Hole through spindle	63 mm
Spindle speed range	30-3000 rpm
Cont. Power rating	11 Kw
15 minutes power rating	15 Kw
Longitudinal stroke	500/700 mm
Cross Stroke	165 mm
Rapid Traverse Rate X/Z	20 / 20 M /min
Maximum Threading rate	5 M/min
Ball Screw Diameter/pitch	32 mm / 10 mm
Number of tool station	12 station (Drum type)
Index time for 1 station	1.3 Sec
OD Tool Shank Size	25 x 25 mm
ID Bar Diameter	32 mm
Tailstock Quill Stroke	76 mm
Tailstock Quill Diameter	95 mm
Tailstock Centre	MT4
Tailstock Position & Lock	Manual
Machine Length	2830/3060 mm
Machine Depth	1725/1725 mm
Machine Height	1820/1820 mm
Controls	Fanuc / Siemens
Positioning (for 300 mm)	0.010 mm
Repeatability	+/- 0.005 mm
Basic Machine weight	4500 Kgs.

The specifications are subject to change without notice.

WORKING CAPACITY

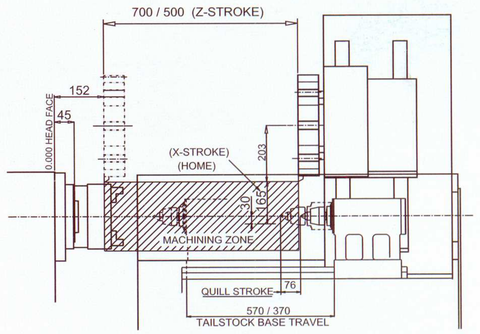

TOOL CLEARANCES LAYOUT (DRUM TYPE TURRET)

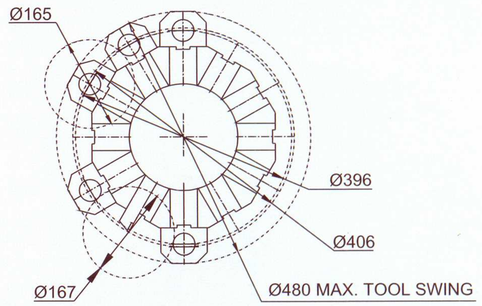

VDI TOOL CLEARANCES LAYOUT (VDI TURRET)

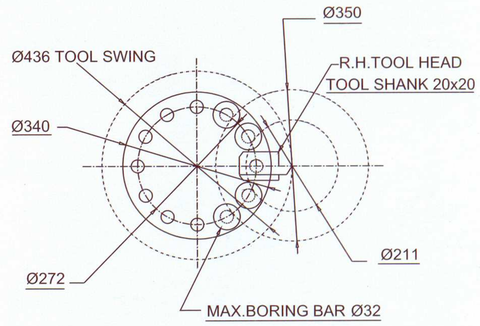

PRODUCT HIGHLIGHTS

- Machine supported on three points ensures no precision leveling. Easy installation.
- Box type guideways are hardened and ground.
- Carriage & cross-slide guideways are surface coated with Epoxy to eliminate stick slip motion.
- Single piece cross slide casting provides high rigidity.
- Large diameter curvic coupling to ensure heavy clamping force and repeat index accuracy.
- Spindle supported on precision bearings ensures excellent part roundness and surface finish.
- Gearless spindle. No metal to metal contact. No vibration. No heat generation.
- Laser used for linear slide positioning accuracy and repeatability on each axis to enure high accuracy

OPTIONS

- Live Tooling
- VDI disc in lieu of Drum turret
- Tool touch probe
- Rotary tools with C axis facility
- Hi - Low Chucking
- Auto door
- Bar Puller with filler tube kit
- Bar feeder
- Parts catcher

MANUFACTURED BY:

MIVEN Machine Tools

Miven Machine Tools Limited
Tarihal Industrial Area, Tarihal,
Hubli - 580 026 (India)

Phone : +91[836] 221 2221 - 4
Fax : +91[836] 2310 411

Website : www.mivenmachinetools.in

MANUFACTURERS REPRESENTATIVE:

MACHINE TOOLS (INDIA) LIMITED.

MMTL / B / 04-02/010107